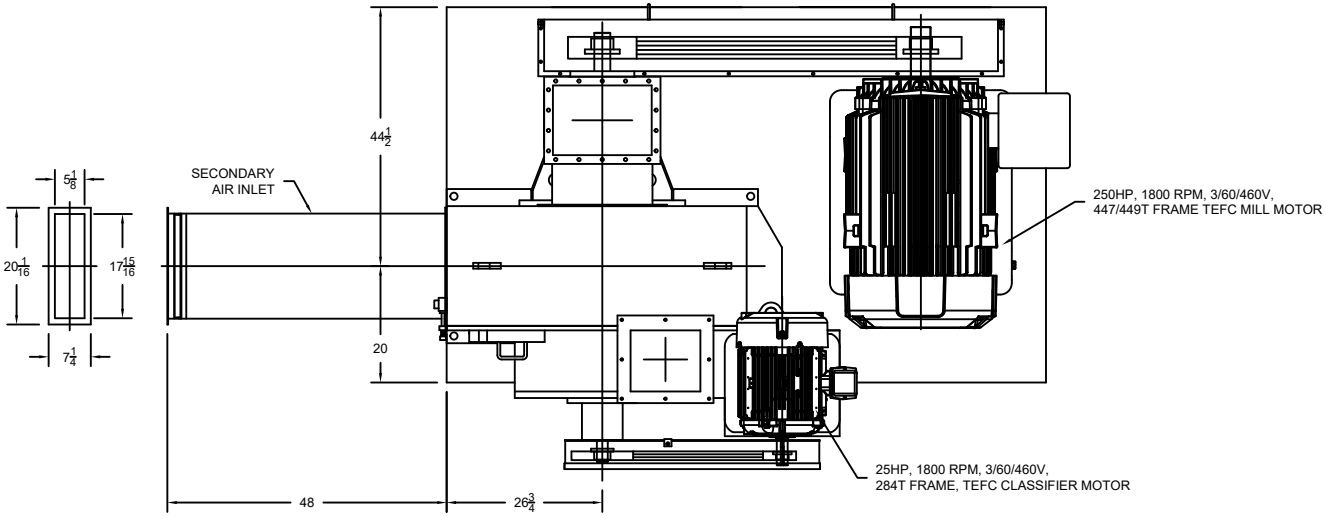

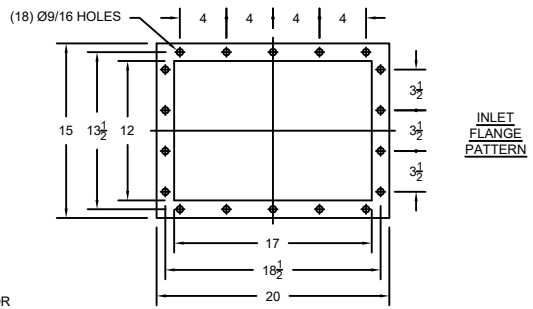

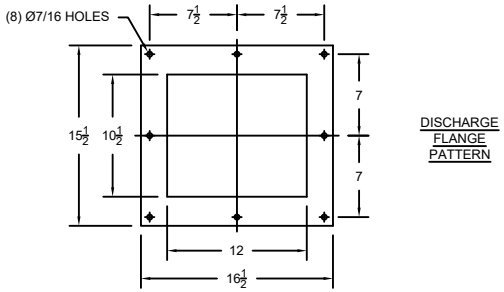

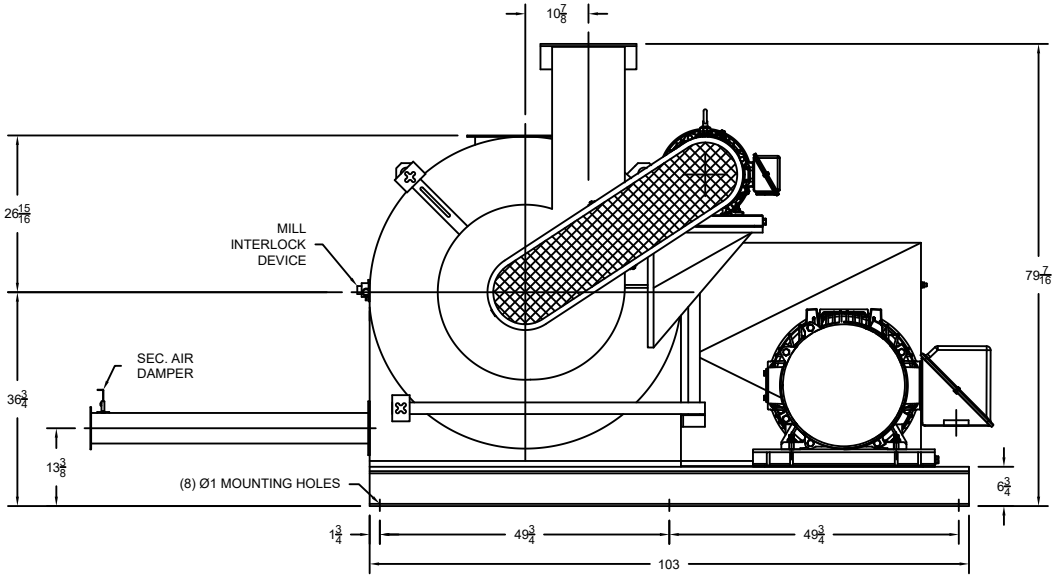

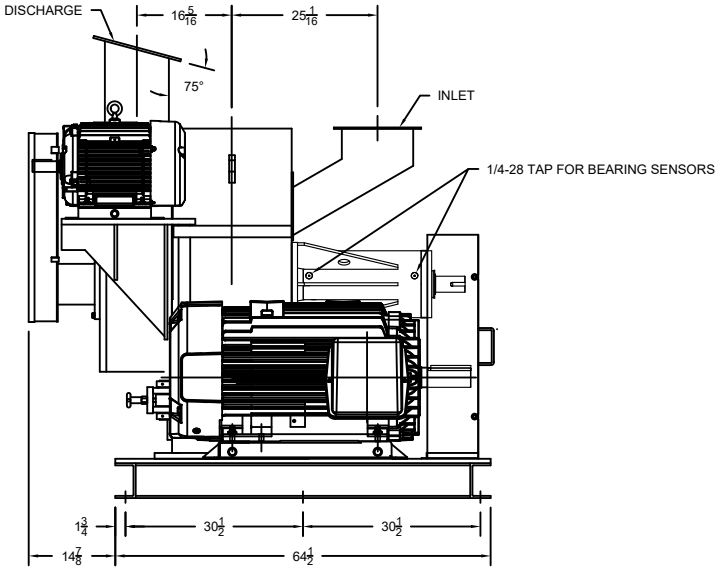

ALL DIMENSIONS ARE FOR REFERENCE ONLY

CONFIDENTIAL

THIS DRAWING IS THE PROPERTY OF PRATER, WHO CLAIMS PROPRIETARY RIGHTS IN THE MATERIAL DISCLOSED. IT IS ISSUED IN CONFIDENCE FOR ENGINEERING INFORMATION ONLY AND MAY NOT BE COPIED OR USED FOR MANUFACTURE OF ANYTHING SHOWN WITHOUT SPECIFIC WRITTEN PERMISSION FROM PRATER.

REV	DESCRIPTION	DATE	BY

PRATER™
2 SAMMONS COURT - BOLINGBROOK, IL 60440
WWW.PRATERINDUSTRIES.COM

CLM-101 CLASSIFIER MILL

DATE: 7/1/15	BY: TSA	NUMBER:
SCALE: 1/16=1 C	APP:	SK-2117-19